Power Equipment Est. 1990

A family owned Australian business

Installation Guideline Summary for Yanmar GM, YM, JH5, LH, BY3, LV, LP2 and LY Series of Engines
Installer and Owners copy

To help ensure that you're new Yanmar engine is installed according to the manufacturer's guidelines and gives long and reliable service. Please review the following condensed summary of installation guidelines before installing the engine in the boat.

Following are the values for sizing the primary fuel / water separator and filter, raw water strainer and the minimum intake and exhaust ventilation surfaces required to ensure good ventilation of the engine bay.

Engine Model	Maximum Fuel flow litre / hour	Maximum Raw water flow litre / hour	Air intake surface cm^2	Air outlet surface cm^2
1GY10	10	350	50	50
2YM15	15	1650	80	80
3YM20	20	1650	100	100
3YM30AE	25	1650	150	150
3JH5E	30	4000	225	225
4JH5E	40	4000	280	280
4JH4-TE	55	4000	375	375
4JH4-HTE	70	4000	500	500
4JH3-DTE	80	4000	625	625
4LHA-HTP	105	6000	750	450
4LHA-DTP	130	6000	950	570
4LHA-ST(Z)P	160	6000	1150	690
6LPA-ST(Z)P2	195	7500	1500	900
8LV320	150	10200	1555	933
8LV370	160	10200	1798	1079
6LY2A-STP	270	13200	2100	1260
6LY3-UTP	215	12900	1825	1095
6LY3-STP	250	12900	2125	1275
6LY3-ETP	285	12900	2325	1395

Australia, New Zealand and South Pacific distributor for these leading brands

YANMAR JOHN DEERE AMAROQ DIESEL COX CRX ENGINES Dtorque ENIQUEST EPROPULSION GORI PROPELLER HUNDESTED PROPELLER mase GENERATORS OXE DIESEL SHAFT SEAL SMART GYRO

PRIMARY FUEL FILTER

Every engine installed in a vessel will need a primary fuel filter. This is to filter the rough elements out of the fuel to save the fuel lift pump from seizing. Further to this, many primary fuel filters available on the market are designed to also separate water out of the fuel and this is highly recommended. The maximum fuel flow for each different engine model is indicated in the table on the previous page.

RAW WATER STRAINER

On every boat, regardless of whether it is a conventional shaft drive, sail drive or water jet, a raw water strainer is necessary. Maximum flow details of the raw water through the engine are available from the table on the previous page.

The raw water needs to be taken in via a proper skin fitting and a Kingston cock.
The only exemptions are for stern drive installations. For the 4LHA-STZP, 6LPA-STZP2 and 4/6BY3Z series the raw water is taken partly from the stern drive leg and partly via a skin fitting with Kingston cock. The latter system is described in the following diagram. Stern drive engines still require a raw water strainer as shown.

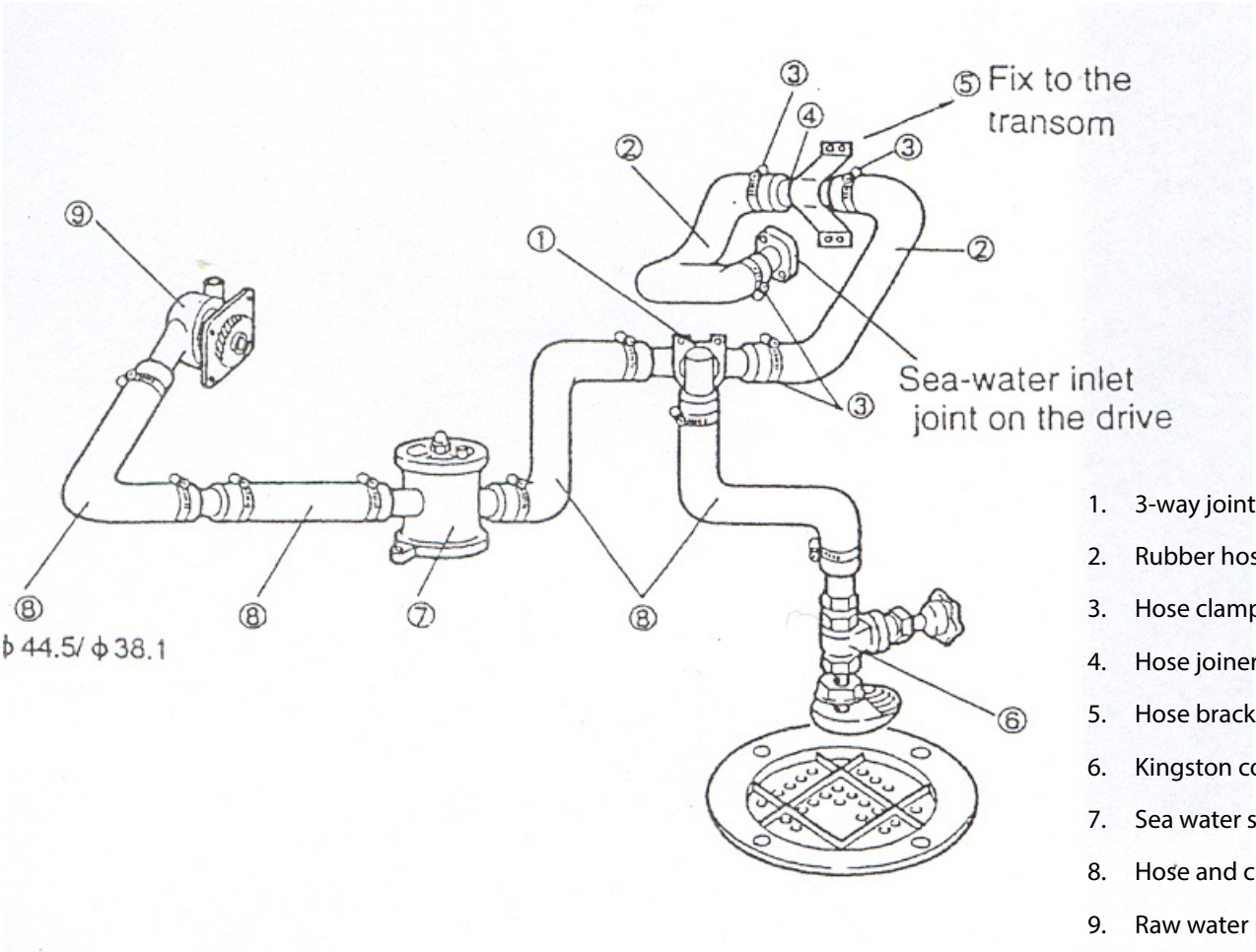

1. 3-way joint
2. Rubber hose
3. Hose clamps
4. Hose joiner
5. Hose bracket
6. Kingston cock
7. Sea water strainer
8. Hose and clamps
9. Raw water pump

ARRANGEMENT OF FLEXIBLE ENGINE MOUNT

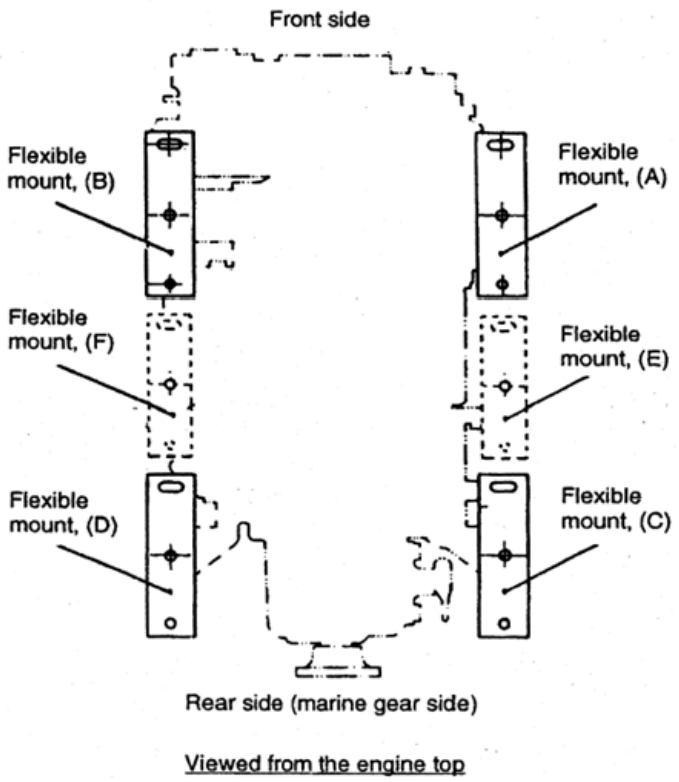

Engine Model	Mount ID	Mount Position
1GY10	2 x 50, 2 x 70	(A)70, (B)70, (C)50, (D)50
2YM15	2 x 75, 2 x 100	(A)100, (B)100, (C)75, (D)75
3YM20	2 x 75, 2 x 100	(A)100, (B)100, (C)75, (D)75
3YM30AE	2 x 75, 2 x 100	(A)100, (B)100, (C)75, (D)75
3JH5	2 x 100, 2 x 150	(A)100, (B)150, (C)100, (D)150
4JH5	2 x 150, 2 x 200	(A)150, (B)200, (C)150, (D)200
4JH4T	4 x 200	(A)200, (B)200, (C)200, (D)200
4LHA	4 x 300	(A)300, (B)300, (C)300, (D)300
6LPA2	4 x BARRY MOUNT	(A)RED, (B)RED, (C)BLUE, (D)BLUE
8LV	4 x METASTIK	ALL (A,B,C,D)
6LY Series	4 x BARRY MOUNT	ALL (A,B,C,D) (RED)

ENGINE BAY VENTILATION

For engine bay ventilation, the minimum values for inlet surface and outlet surface as mentioned in the table on page 1, can be used.

Effort should be made to direct the coolest air to the engine air filter while making sure that no seawater spray can enter the engine air filter.

EXHAUST SYSTEM

Most marine engines will be installed with a wet exhaust gas system. This means that exhaust gasses will be mixed with the raw water that exits the coolers after the exhaust gases have left the exhaust manifold or turbocharger. The raw water will cool the exhaust gasses and will also give some degree of exhaust noise reduction.

However, if the following parameters on the correct routing of the exhaust gas systems in a vessel are not followed, the water mixing exhaust gas system can in fact cause severe engine damage due to the ingress of raw water up the exhaust system and into the engine.

Therefore the following dimensions and specifications should be adhered to:

- **Minimum exhaust gas riser height 350 mm, measured from water line to bottom of the mixing elbow or exhaust gas hose if a water lock system is installed.**
- **Minimum height of transom outlet 150 mm, measured from waterline to bottom of transom outlet pipe**
- **Maximum allowable backpressure in mm H2O when measured at maximum engine speed (i.e. full load rpm) as listed below:**
    - **1GM10 @ 703 mm H2O**
    - **YM / JH / LY2-3 @ 2000 mm H2O**
    - **LPA @ 3059 mm H2O**
    - **LV @ 5600 mm H2O**

The dimensions (as per following diagram) and backpressure mentioned here are valid for all the above mentioned engine models.

The only exception is Stern Drive engines with through leg exhaust systems. In that case, the minimum riser height must be at least 300 mm.

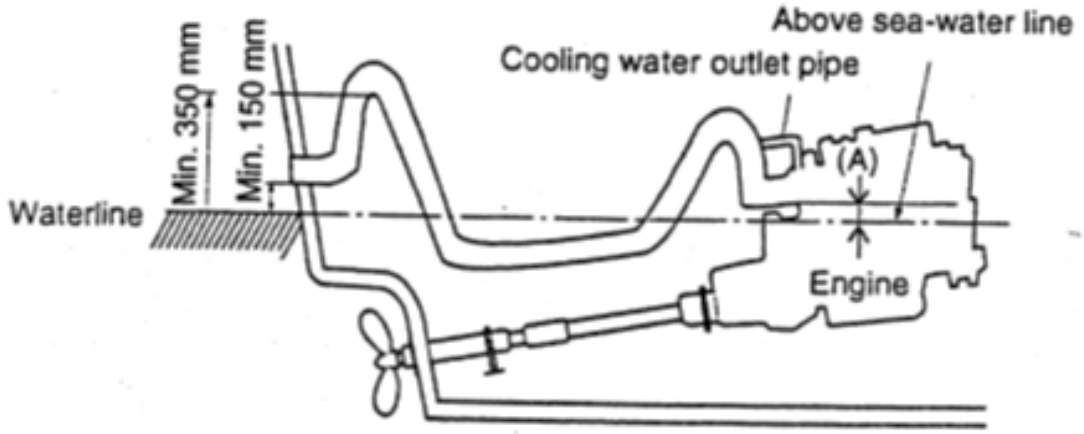

As a rule of thumb, when using a waterlock exhaust system, the exhaust gas line out of the waterlock should be at least 1 inch (2.54cm) bigger in diameter than the hose that comes of the exhaust gas mixing elbow. This rule applies to relatively short run exhaust gas systems and regardless, the maximum back pressure must still be accurately verified during a vessel sea trial. If the test results indicate an exhaust back pressure that exceeds the noted limits, corrective action must be taken before placing the vessel into service. Failure to do so may result in reduced engine life or even engine failure.

PROPELLER MATCHING: SAIL BOAT

For all Yanmar GM, YM and JH series engines, the engine / propeller matching point should be at least 50 rpm over the maximum rated engine speed. For instance, the top rpm should be a minimum of 3650 rpm for a 3YM20 (rated rpm of 3600). This should be confirmed by means of a calibrated hand held tachometer at full throttle operation in forward gear.

This extra 50 rpm engine speed will assure that with growth on the hull, the engine will not be overloaded. It will also help enhance engine acceleration and fuel economy.

For propeller size calculations, you should use the maximum rated engine flywheel output less 4% for power loss through the marine transmission.

Therefore, the output to match the propeller will be as in the following table:

1GY10	8.7 mhp	3650 rpm
2YM15	13.6 mhp	3650 rpm
3YM20	20.2 mhp	3650 rpm
3YM30AE	27.8 mhp	3250 rpm
3JH5E	37.8 mhp	3050 rpm
4JH5E	51.8 mhp	3050 rpm
4JH4-TE	72 mhp	3250 rpm
4JH4-HTE	107 mhp	3250 rpm
4JH3-DTE	120 mhp	3850 rpm

PROPELLER MATCHING: POWER BOAT

For all Yanmar LH, LP, LV and LY series engine, the engine / propeller matching point should be between 100 – 200 rpm over the maximum rated engine speed. For instance, 3400 – 3500 rpm for a 4LHA or 6LYA type engine (both 3300 rated rpm) and 3900 – 4000 rpm for 6LPA type engines (3800 rated rpm). This should be confirmed by means of a calibrated hand held tachometer at full throttle operation in forward gear.
BY3 & LV electronically controlled common rail engines must achieve MAX rated RPM's.

This extra engine speed will assure that with growth on the hull, the engine will not be overloaded. It will also help enhance engine acceleration and fuel economy.

As a calculation parameter for the propeller size calculation, the maximum engine output should be used. Also, if the quality and specific gravity of the fuel in use is not equivalent to that stated on the specification sheet, allowances must be made for a corresponding reduction in engine output. As a guide only, we recommend you use the following (before transmission losses) which should cover most (but possibly not all) variables and provide a small reserve.

MAXIMUM RATED POWER

4LHA-HT(Z)P	155 mhp	8LV370	365 mhp
4LHA-DT(Z)P	195 mhp	6LY3-UTP	370 mhp
4LHA-ST(Z)P	235 mhp	6LY2A-STP	430 mhp
6LPA-ST(Z)P2	305 mhp	6LY3-ETP	470 mhp
8LV320	315 mhp	6LY3-STP	430 mhp

Conversion factor: 1mhp = 0.7355kW = 0.9863bhp

PROPELLER SHAFT ARRANGEMENT

All Yanmar marine pleasure craft engines are delivered with flexible mounts. This means that the engine is going to move slightly during operation. The propeller shaft arrangement must allow some movement as the engine moves during normal operation. If this is not the case, propeller shaft bearing wear, gearbox wear or damage and or flexible mount failure may occur.

In case of jackshaft driven applications, make sure that the jack shaft has got a sliding mechanism that will allow the engine to move back and forth as well as up / down and left / right. Fixed length jackshafts are not approved.

WATER INGRESS

Water ingress via air ducts must be avoided or at least kept to a bare minimum. Water ingress via engine bay hatches should be avoided. Water leaking in via engine hatches can have very detrimental results, including in extreme cases, total engine failure if water is able to enter the air induction system.

ACCESSIBILITY

For the purposes servicing and daily checks, sufficient access space must be provided to ensure servicing and repairs can be carried out in efficient manner. Thought should be given on access to the dipstick, coolant bottle, gearbox dipstick and or power steering reservoirs, fuel and oil filters, raw water pump impeller and any other service item that may apply.

ELECTRICAL SYSTEM

Battery Size	Minimum
GM/YM Series	12 Volt-80 Ah (650CCA)
JH5 Series	12 Volt-80 Ah (650CCA)
JH3/4T Series	12 Volt-150 Ah
4LHA Series	12 Volt-120 Ah
6LPA Series	12 Volt-120 Ah
8LV Series	12 Volt-120 Ah
6LY2 Series	12 Volt-150 Ah
6LY3 Series	12 Volt-150 Ah

FRONT POWER TAKE OFF

For detailed guidelines on front power take off installation please check the Yanmar Pleasurecraft Installation Manual.

Make sure that any added front pulleys are kept as close to the engine as possible and that any load does not exceed the maximum allowable for your specific engine model.

Do not drill into or clamp into or onto the engine mounted harmonic balancer. Major engine damage and or total failure could result if you do.

TORSIONAL VIBRATION

Disregarding propulsion system torsional compatibility could cause damage to components in the engine and drive train, resulting in engine and or drive train failure. At a minimum, system incompatibility could result in gear clatter and damage to transmissions or internal engine gears and components, as well as throwing V belts, and/or excessive belt and pulley wear. The responsibility of ensuring the torsional compatibility of the propulsions system rests with the assembler of the total drive system.

We would particularly highlight that where a water jet and jackshaft are used, that a Torsional Vibration Analysis (TVA) must be carried out for the complete drive system. This includes the engine flexible coupling, gearbox, drive shaft and the jet rotational assembly, **especially where a universal drive shaft is used without a torsionally resilient coupling or gearbox in the driveline.** It is the responsibility of the vessel builder and or the engine installer to see that this is carried out. Neither Yanmar nor Power Equipment will warrant any engine with a drive shaft coupled directly to the flywheel or coupling that does not have a slip joint.

SERVICE INTERVALS

In addition to the service intervals mentioned in the operator's manual, we would also recommend the following.

- After the first 50 hours, check the alignment of gearbox and propeller shaft flange due to settling of the engine's flexible mounts.
- Every year, check the exhaust gas mixing elbow for internal and external leaks. The mixer elbow can be subject to corrosion due to the sulfuric acid that is formed as part of the process of combustion within the engine.
- Every 2 years, check the flexible engine mounts for their integrity and general condition.

WARRANTY REGISTRATION

It is important to register your new Yanmar engine. For contact details for Australian Yanmar Marine Dealer network, please visit Find a Dealer at www.powerequipment.com.au.

If warranty registration is not completed in a timely manner;

- It can cause delays with warranty processing and servicing
- It can be very difficult to track engines in the event of a product re-call or re-work.

IMPORTANT NOTE

Neither Power Equipment nor Yanmar will be held responsible for engine in service issues or failures that are the result of bad installation practice by others, misapplication, incorrect propeller matching, excessive back pressure, poor maintenance or any other installation related problem.

For further details on recommended installation practices, the please refer to the Yanmar Engine Installation Manual and the Mercruiser Sterndrive Installation Manual. If you are still in doubt or unclear, please ask your selling Dealer.

All information subject to change without notice. Effective date: 1st October, 2025.